Catalogo ricambi
Spare parts list
Catalogue pièce détachées
Ersatzteile katalog

Beretta

Wall hang boilers

Super Exclusive Micromix

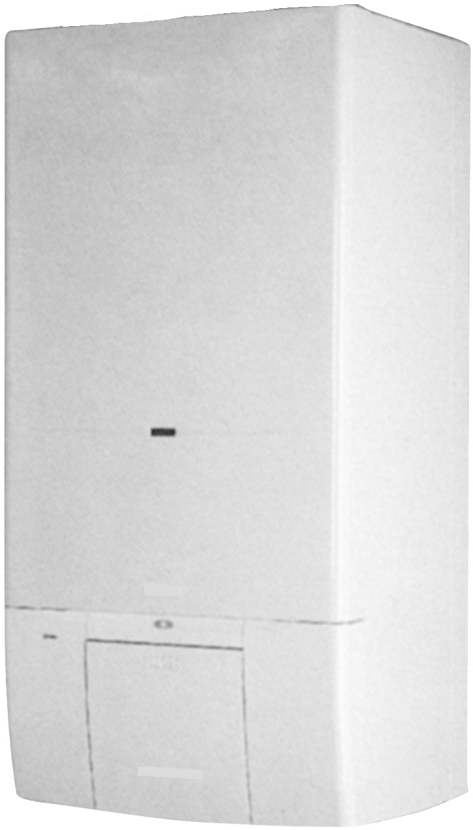

MODEL	PART NUMBER
SUPER EXCLUSIVE MICROMIX	2290163 (1OW)

Danimarca

Cod. E113 Rev.0.0 (04.04)

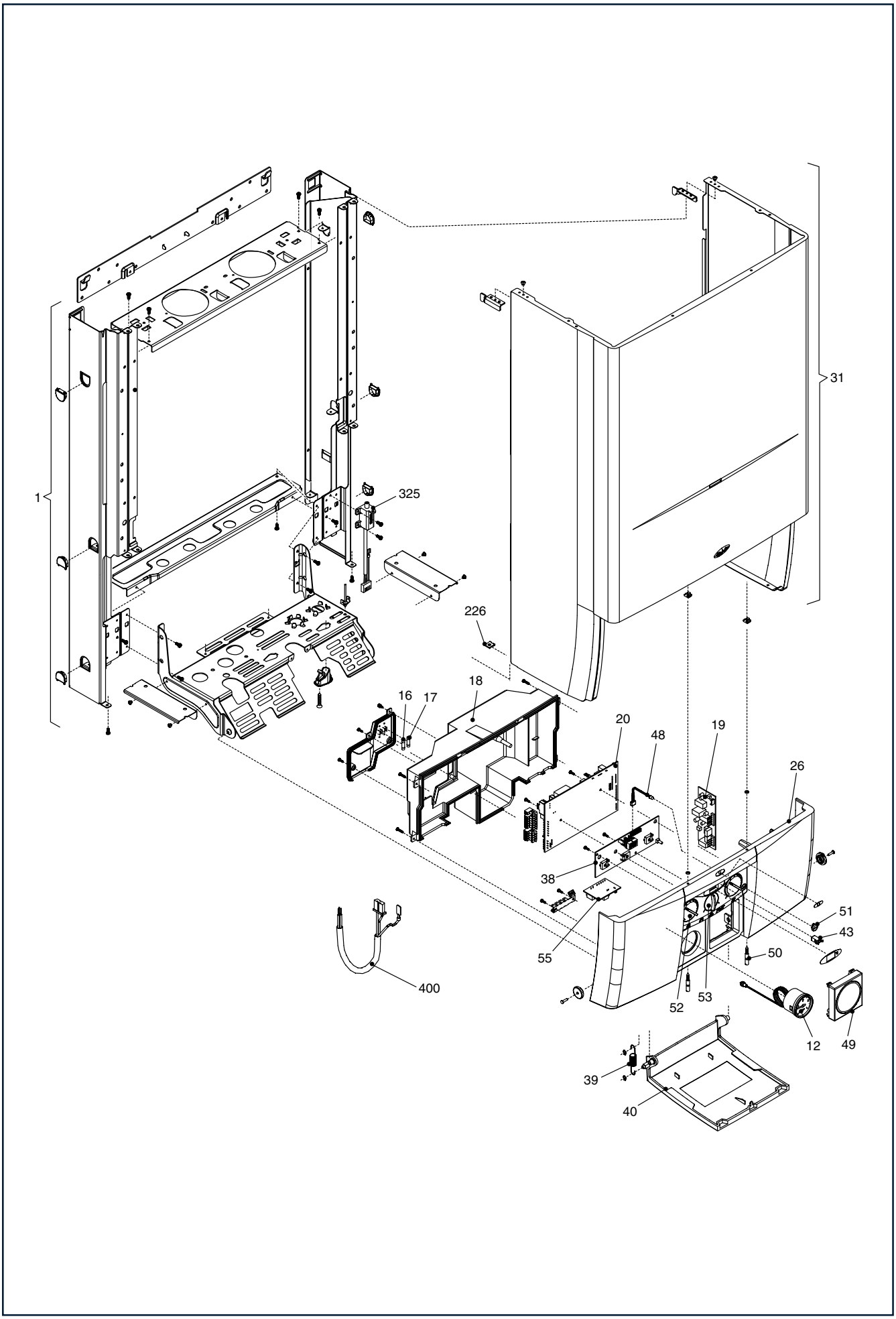
1
31
325
226
18
16
17
20
48
19
26
38
51
43
50
55
400
52
53
12
49
39
40

FRAME, FRONT PANEL, CASE — Drawing 1

POS.	DESCRIPTION	Part number
1	Frame assembly	R01005184
12	Pressure gauge	R1857
16	Inline fuse	R8968
17	Inline fuse	R1947
18	Printed circuit board cover	R10021849
19	Printed circuit board	R10021848
20	Printed circuit board	R10024731
26	Instrumental panel	R10022029
31	Case assembly	R2062
38	Printed circuit board	R10024558
39	Spring	R1862
40	Door panel	R10022330
43	Push-push cover	R1864
48	Green-red led	R1858
49	Plastic bezel	R8654
50	Pin	R1867
51	Hole cap	R1861
52	Selection knob kit	R01005072
53	Control knob kit	R01005073
55	Printed circuit board	R10022227
226	Edge clip	R5128
325	Transformer	R10022399
400	Wiring harness	R10021117

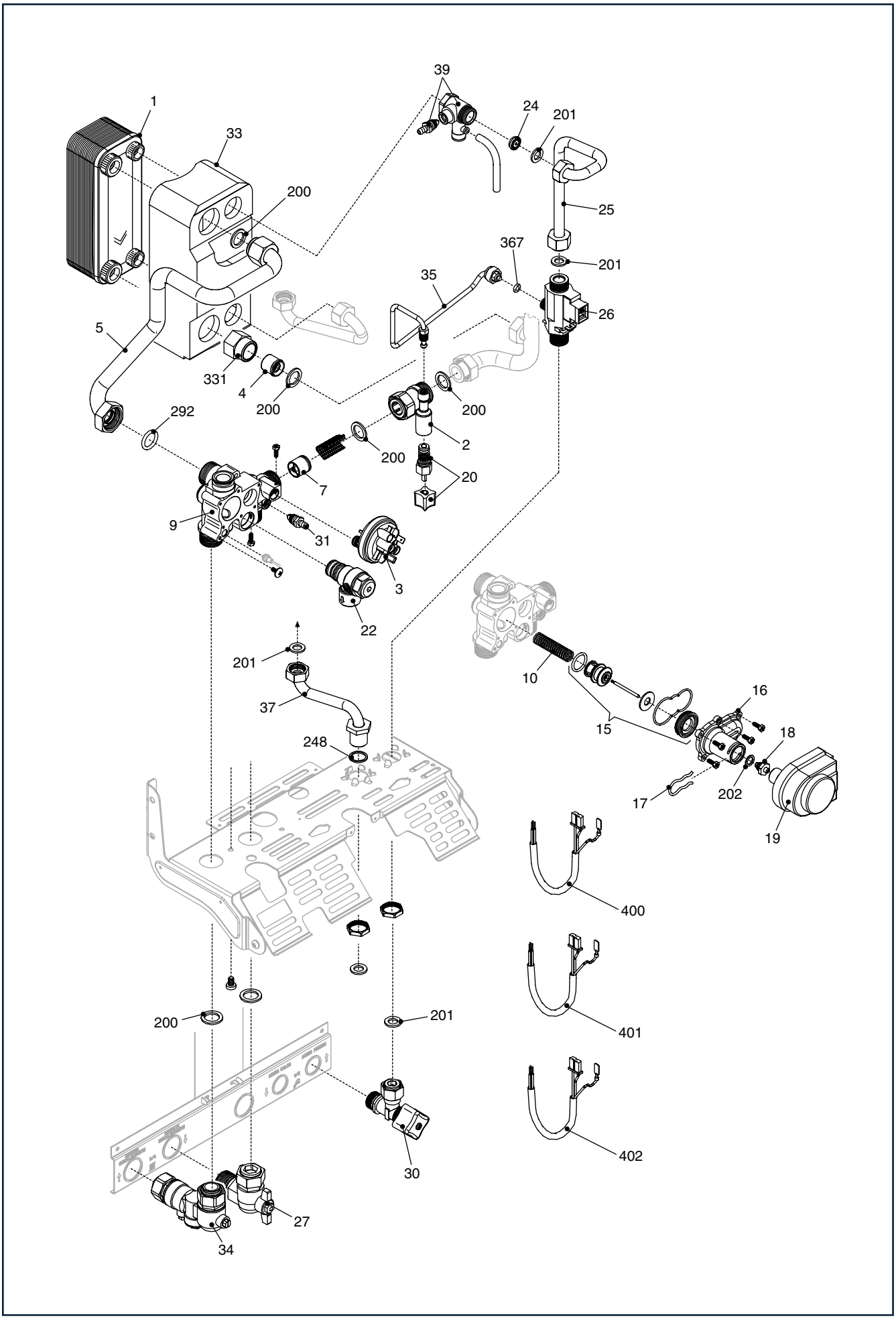
39
1
24
201
33
200
25
367
201
35
26
5
331
4
200
200
292
2
200
20
7
9
31
3
22
201
10
37
16
15
248
18
17
202
19
400
401
200
201
402
30
27
34

HYDRAULIC COMPONENTS 1 — Drawing 2

POS.	DESCRIPTION	Part number
1	Domestic water heat exchanger	R10022302
2	Connection	R10021899
3	Pressure switch	R2044
4	Non return valve	R2908
5	Pipe	R10022321
7	Heating by-pass valve	R2047
9	Heating distributor manifold	R10020439
10	3 Port valve spring	R6862
15	3 way valve overhaul kit	R01005127
16	4 way valve cover	R2904
17	Motorised valve fixing fork wrench	R2906
18	Or union assembly bracket	R6919
19	Motorised valve	R2905
20	Cock and knob kit	R10021006
22	Safety valve	R2907
24	Flow governor	R1956
25	Pipe	R10022960
26	DHW actuator	R10022752
27	Heat water cock	R6951
30	DHW water cock	R1888
31	Venting plugs kit	R01005137
33	Domestic water heat exchanger protection	R10022327
34	Heat water cock	R8791
35	Filling pipe	R10023644
37	Pipe	R10022324
39	Safety valve	R10023529
200	Washer	R5023
201	Washer	R5026
202	Washer	R5041
248	Washer	R5208
292	O-ring	R7999
331	Connection	R10022328
367	O-ring	R8542
400	Wiring harness	R10022336
401	Wiring harness	R10022313
402	Wiring harness	R10022192

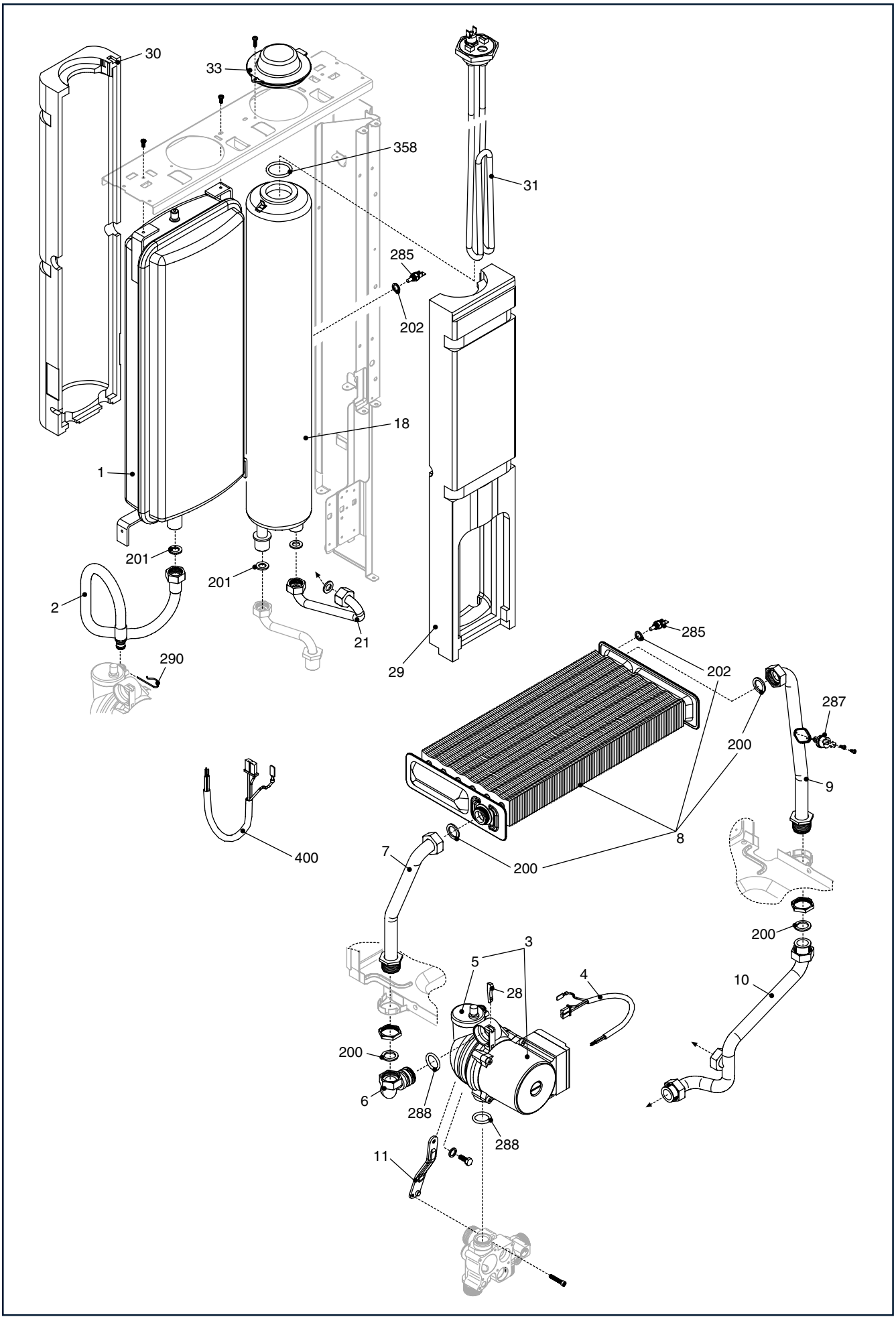
30
33
358
31
285
202
18
1
201
201
2
21
290
29
285
202
287
200
9
8
400
7
200
200
3
5
4
28
10
200
6
288
288
11

HYDRAULIC COMPONENTS 2 — Drawing 3

POS.	DESCRIPTION	Part number
1	Expansion vessel	R10022318
2	Flexible pipe	R10023603
3	Pump	R10021792
4	Pump cable	R10022338
5	Automatic air vent bottle	R0439
6	Pipe	R10023209
7	Pipe	R2051
8	Heat exchanger	R10020513
9	Pipe	R10020519
10	Pipe	R10022322
11	Bracket	R1642
18	Tank	R10022306
21	Pipe	R10022325
28	Pump lock key	R9263
29	Tank insulating	R10022308
30	Tank insulating	R10022307
31	Resistor assembly	R10022366
33	Hole cover	R10022319
200	Washer	R5023
201	Washer	R5026
202	Washer	R5041
285	NTC sensor	R8484
287	Limit thermostat	R2258
288	O-ring	R6898
290	Clip	R2165
358	O-ring	R10022948
400	Wiring harness	R10022337

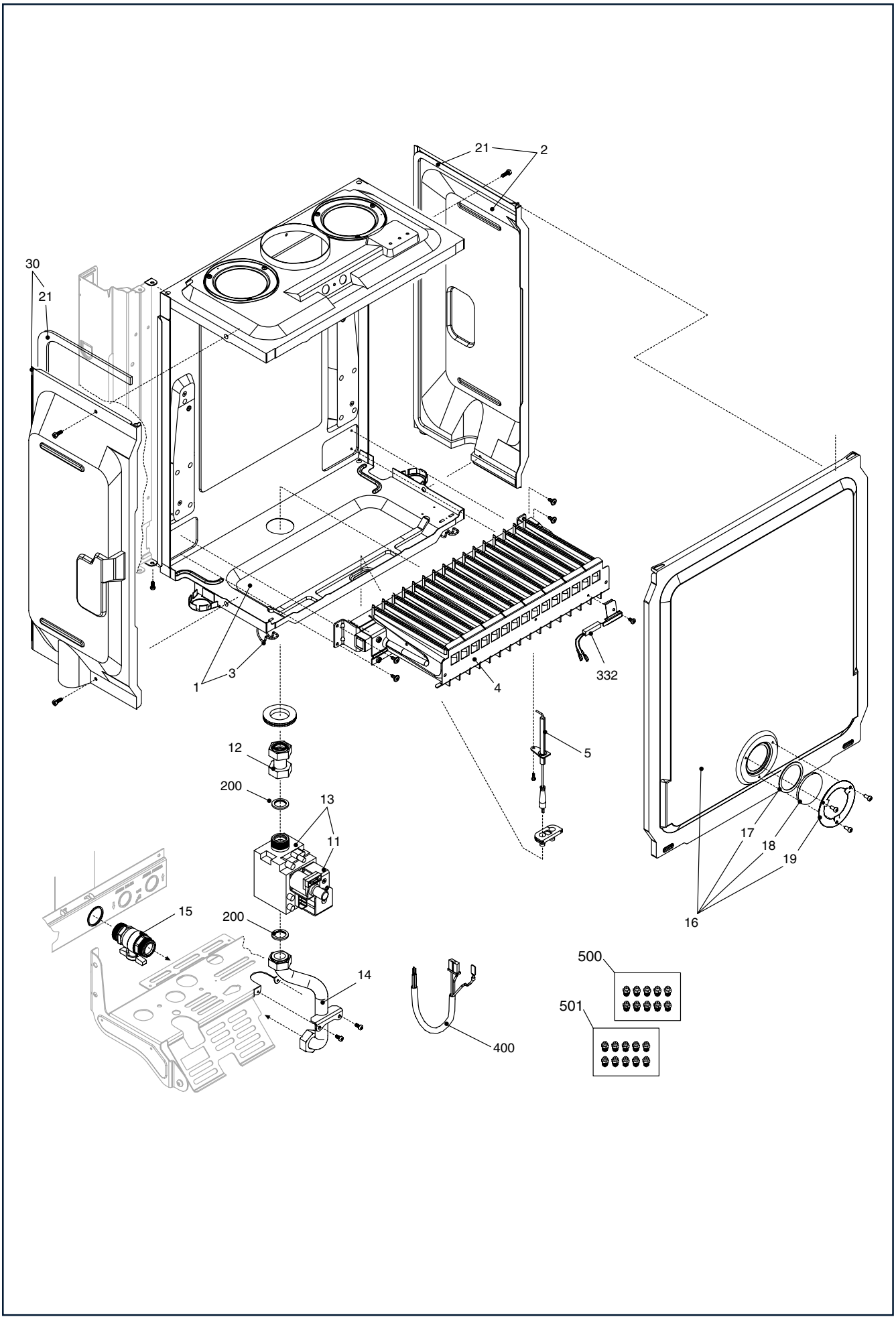
21
2
30
21
1
3
4
332
5
12
200
13
11
17
18
19
16
15
200
14
400
500
501

BURNER — Drawing 4

POS.	DESCRIPTION	Part number
1	Roomsealed chamber	R10022390
2	Air box side	R2059
3	Air box clip	R0442
4	Main burner	R10020511
5	Spark electrode	R10025889
11	Gas valve solenoid	R10020838
12	Gas pipe	R2680
13	Gas valve	R10021021
14	Pipe	R10022320
15	Gas cock connection	R1889
16	Front panel for air box	R10020430
17	Washer	R5072
18	Glass	R3139
19	Glass flange	R4007
21	Washer	R5905
30	Air box side	R2060
200	Washer	R5023
332	Burner thermostat	R2600
400	Wiring harness	R10024340
500	N.G. Conversion kit	R01005088
501	LPG Conversion kit	R01005090

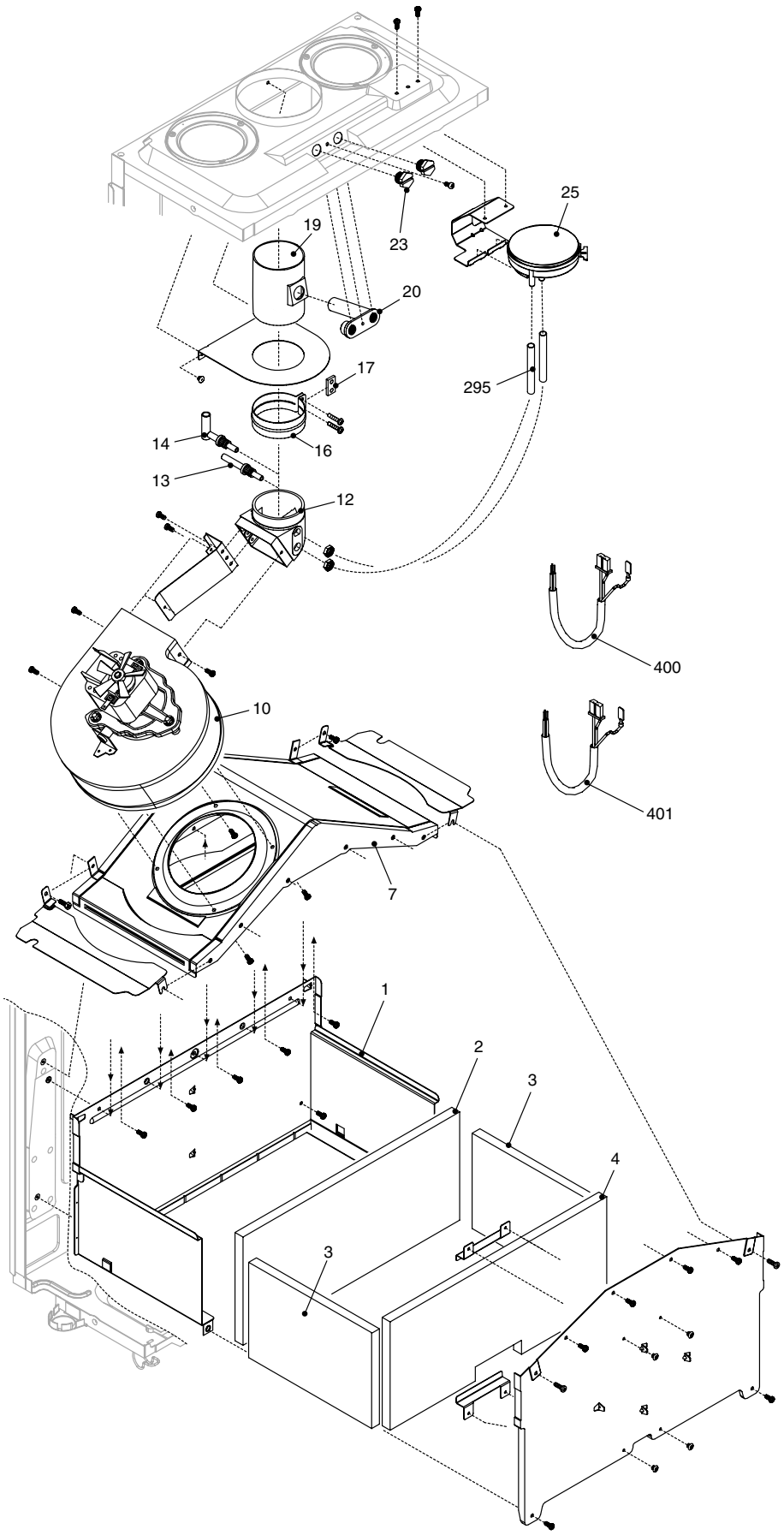
25
19
23
20
17
295
14
16
13
12
400
10
401
7
1
2
3
4
3

COMBUSTION COMPONENTS — Drawing 5

POS.	DESCRIPTION	Part number
1	Combustion chamber assembly	R10020514
2	Lower insulation panel	R10020518
3	Lateral insulation panel	R5271
4	Front insulation panel	R10020517
7	Hood assembly	R1968
10	Fan	R2076
12	Connection	R7280
13	Pressure connection	R6985
14	Pressure connection	R7948
16	Clamp for tube	R5916
17	Washer clamp	R5917
19	Connection and tube	R8083
20	Block with combustion analysis check point	R8085
23	Brass cap	R8086
25	Pressure switch	R2677
295	Silicone tube	R1457
400	Wiring harness	R10020529
401	Wiring harness	R1870

Beretta reserve the right to change the specifications without prior notice.
Consumers' statutory rights are not affected.